3

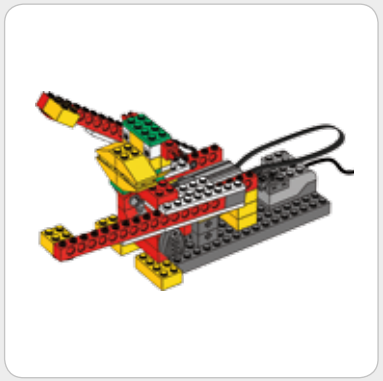

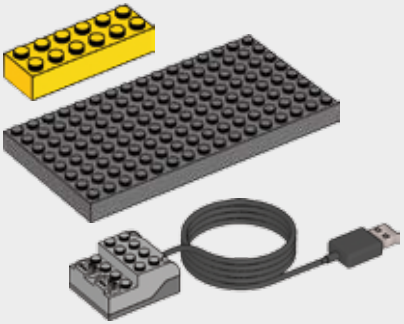

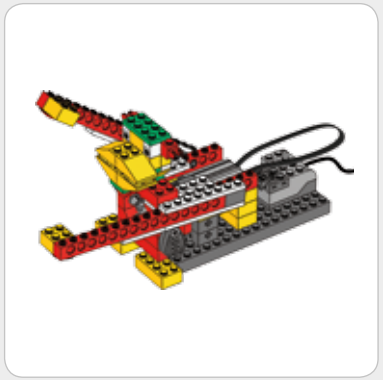

1

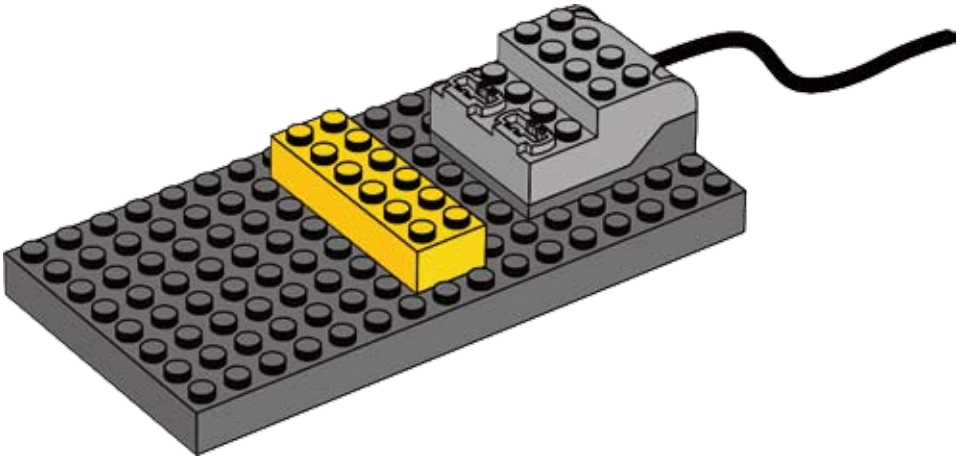

2

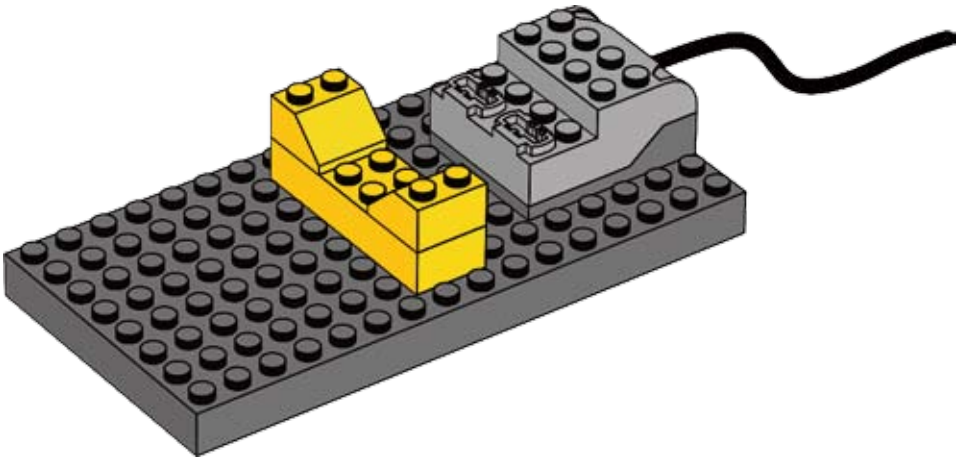

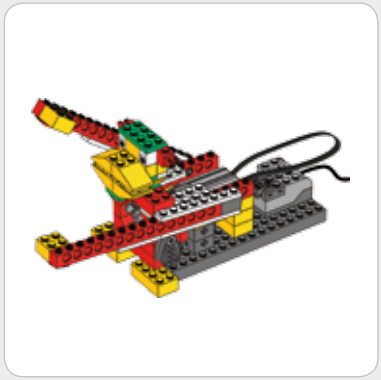

3

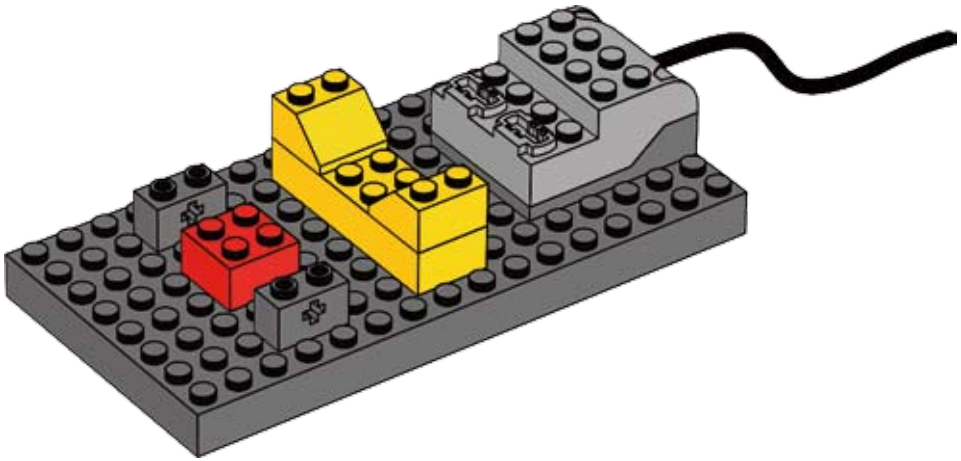

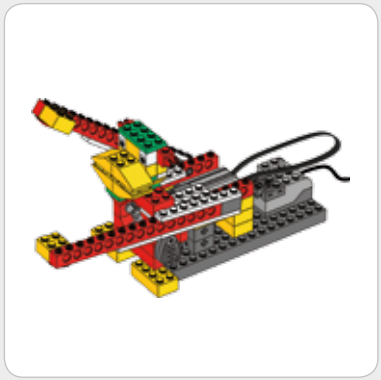

4

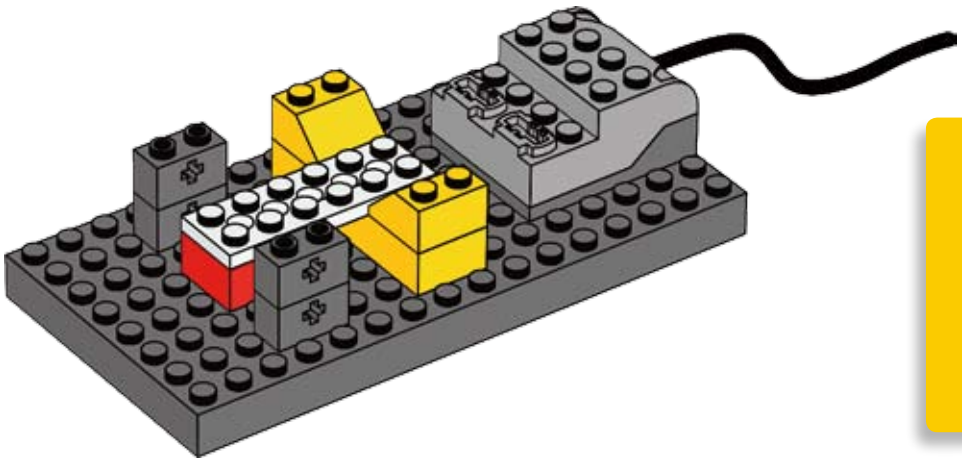

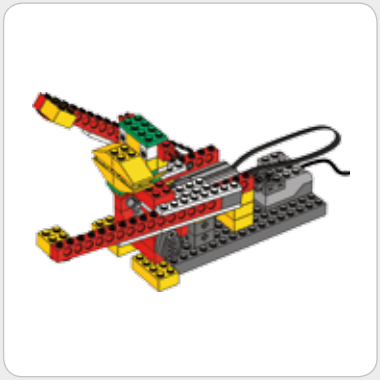

5

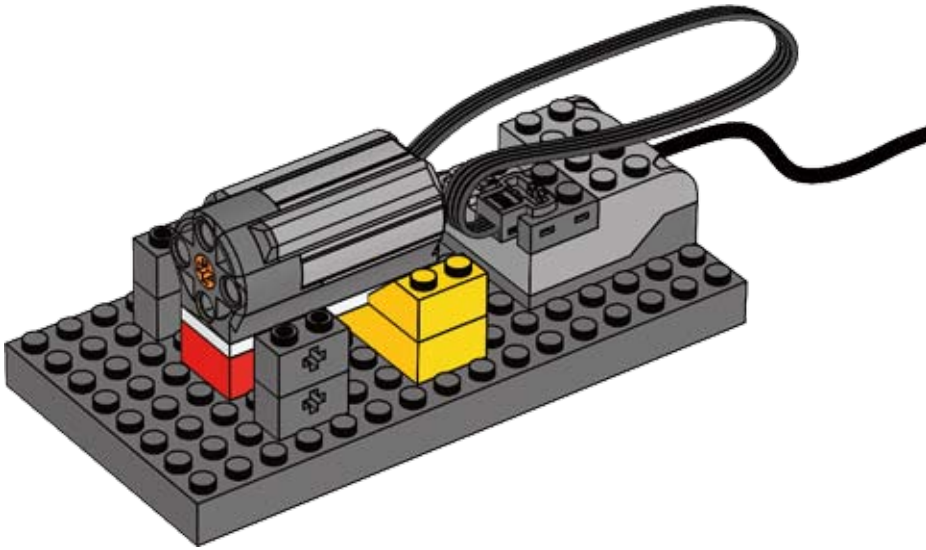

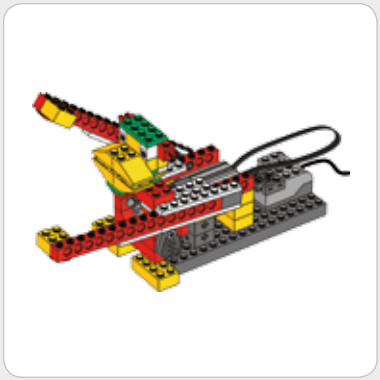

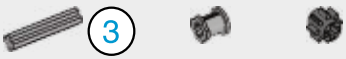

6

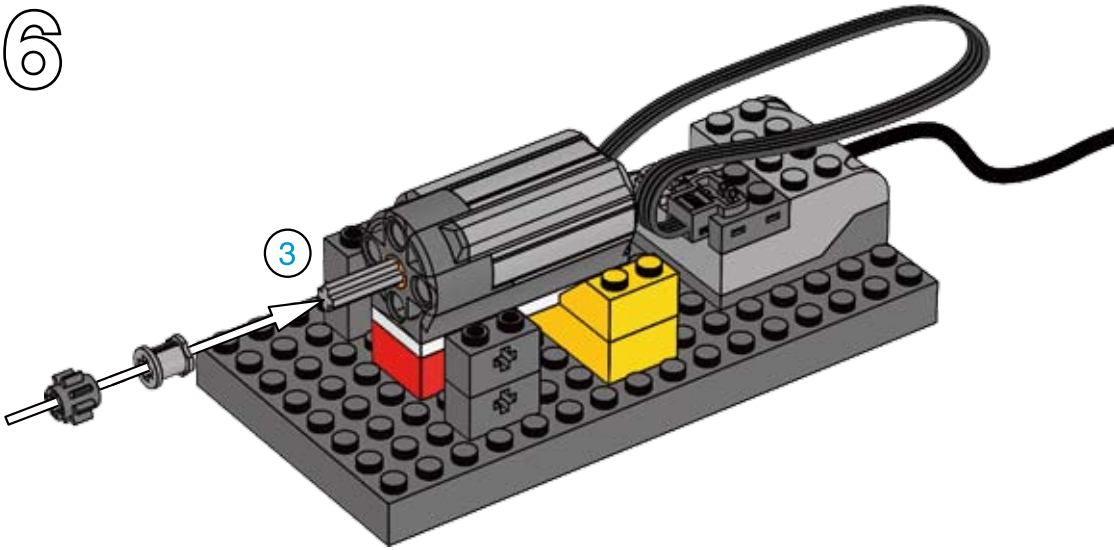

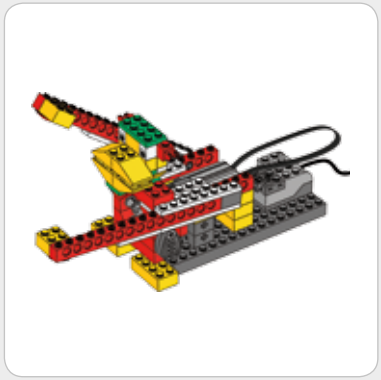

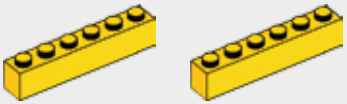

7

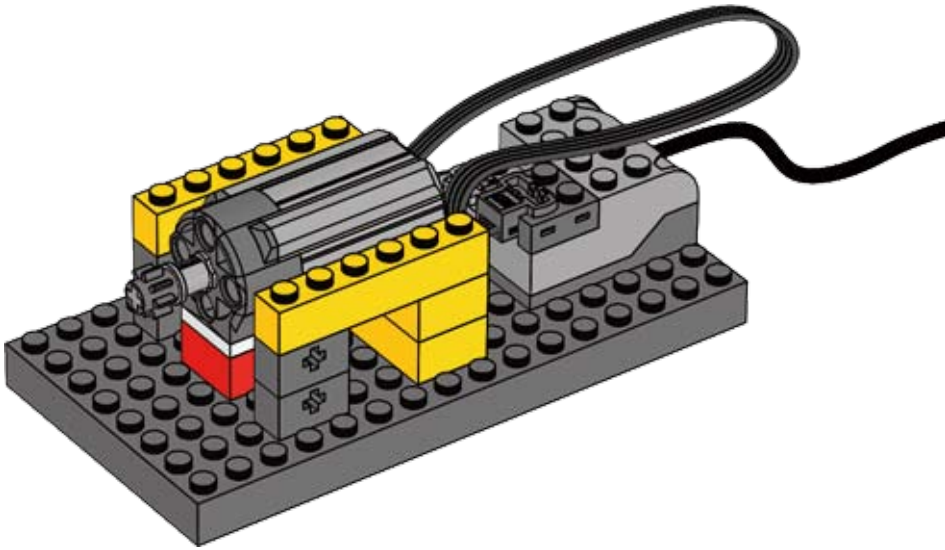

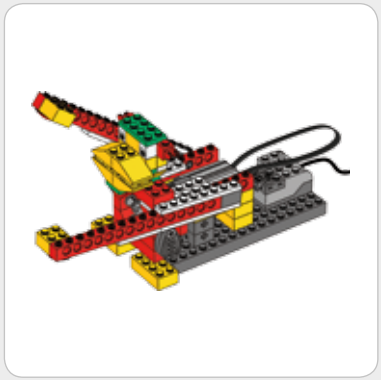

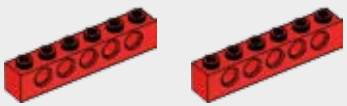

8

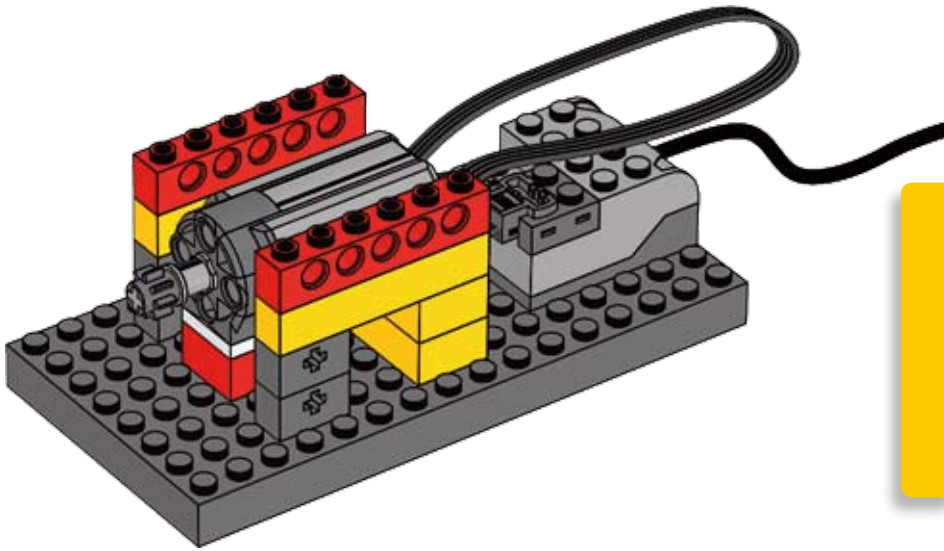

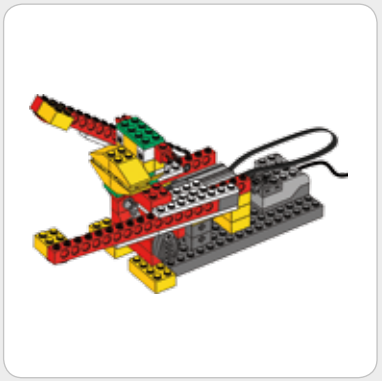

9

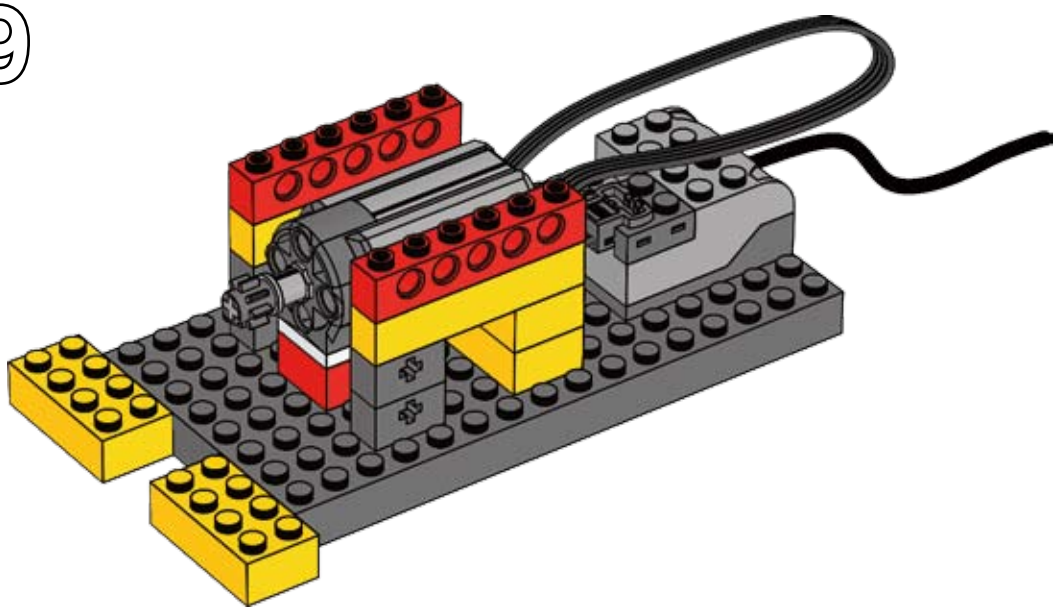

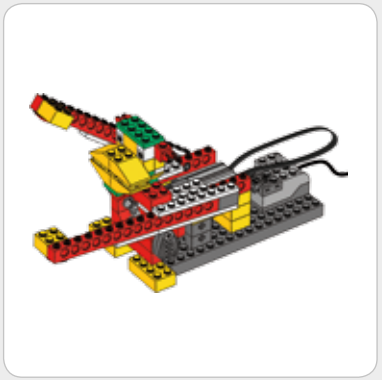

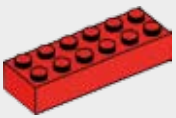

10

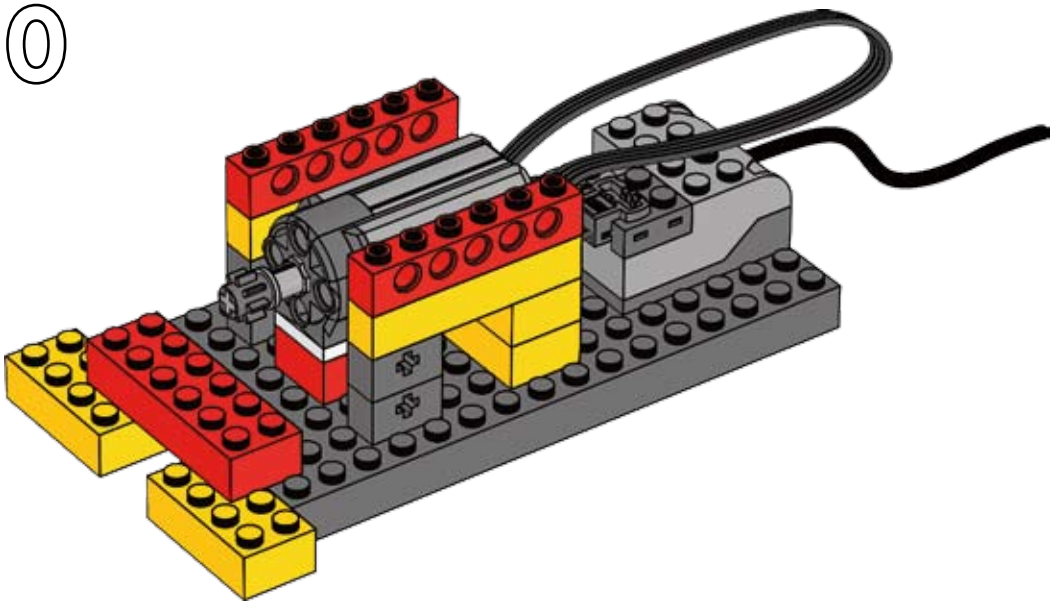

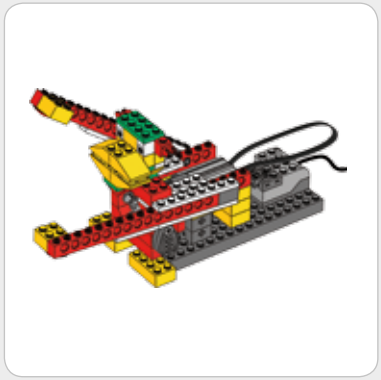

11

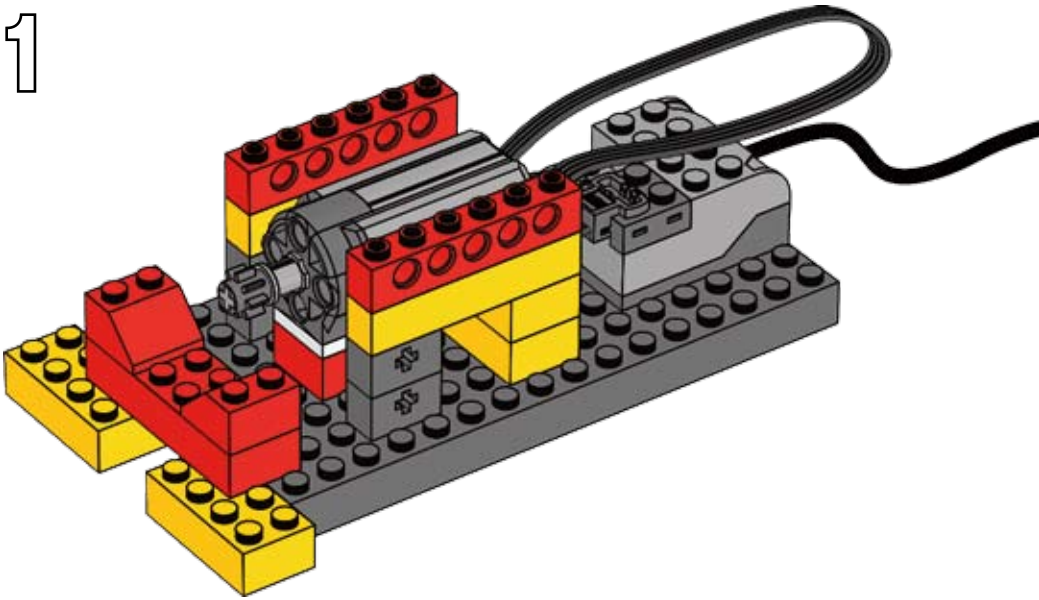

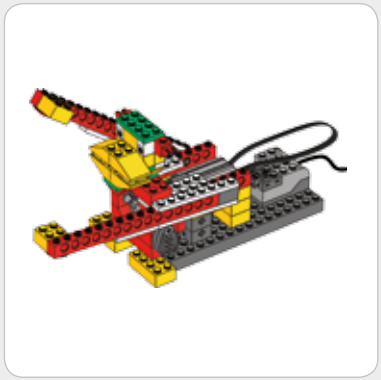

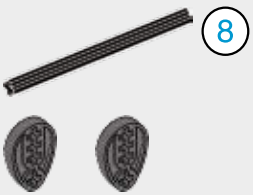

12

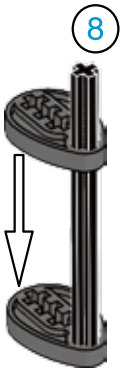

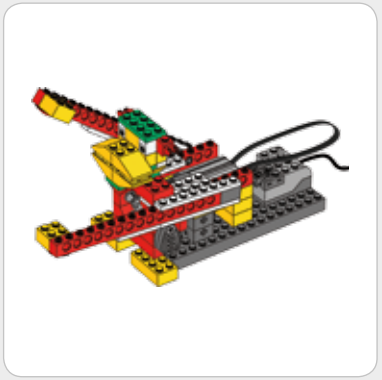

13

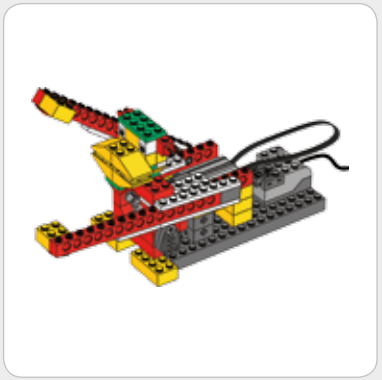

14

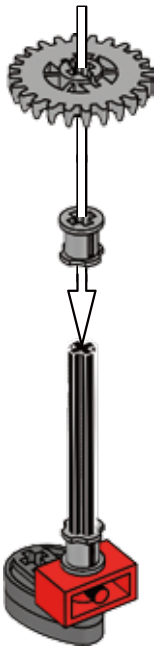

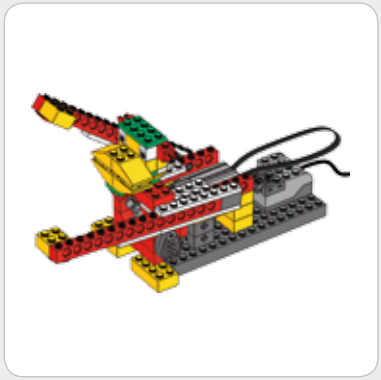

15

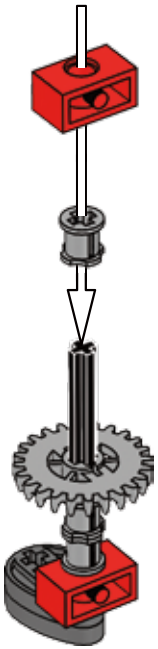

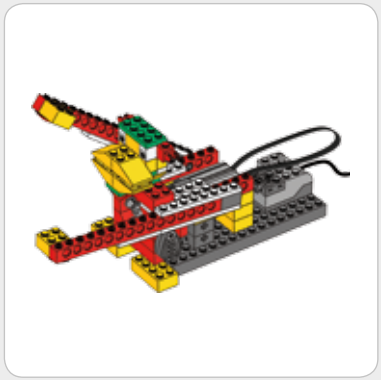

16

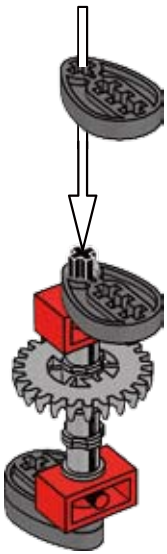

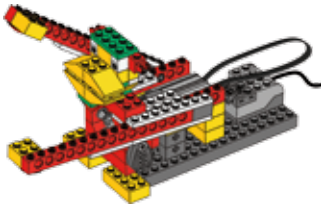

17

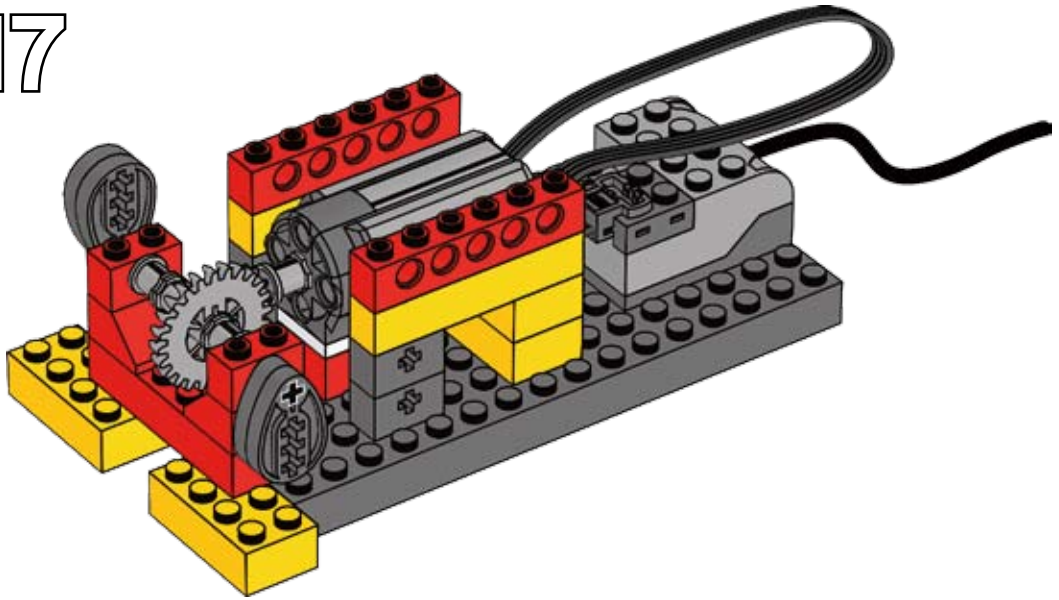

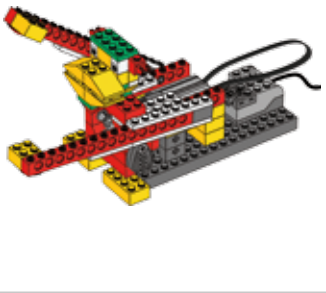

18

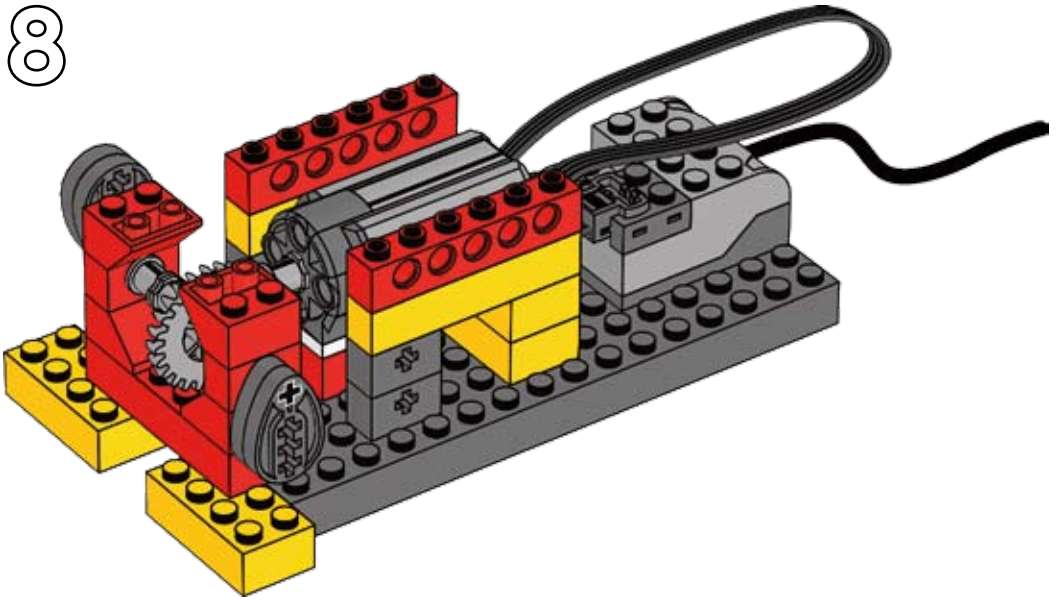

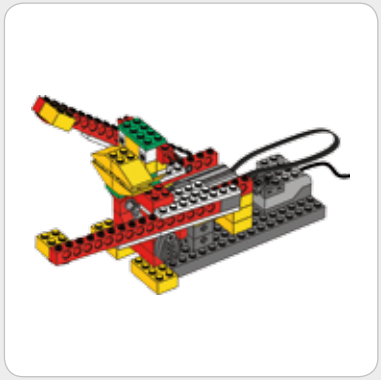

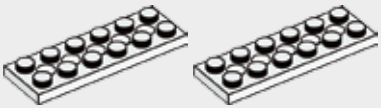

19

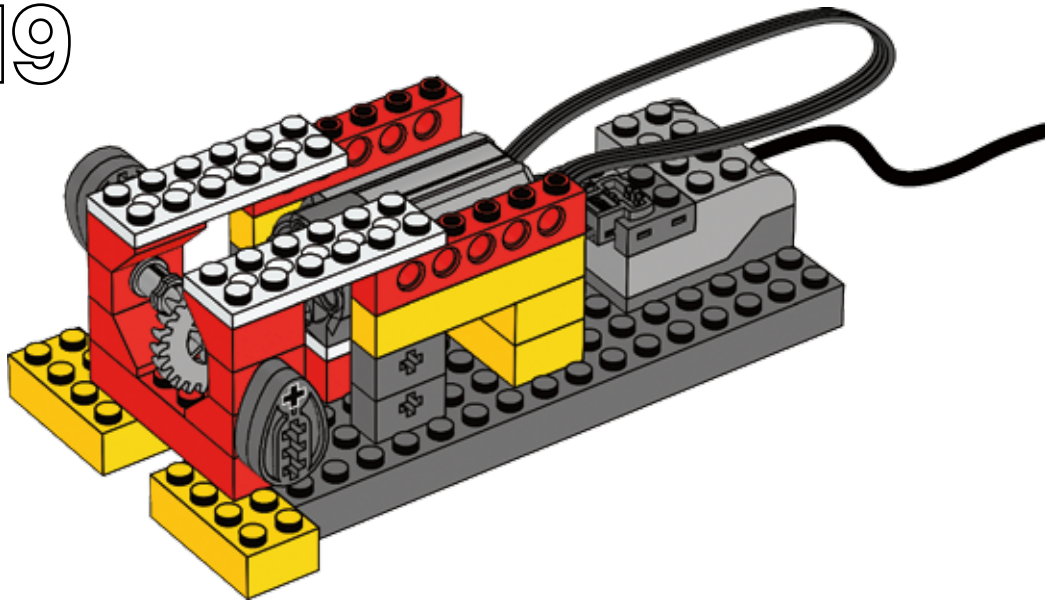

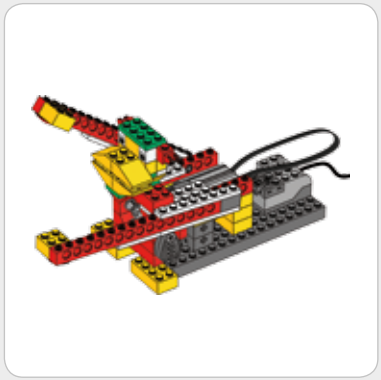

20

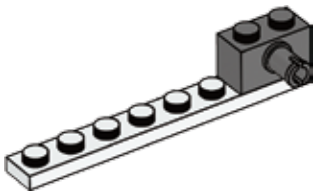

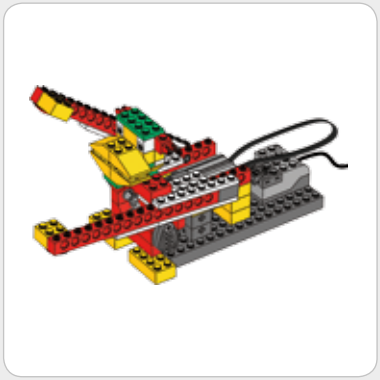

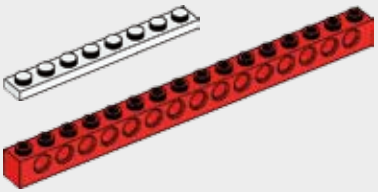

21

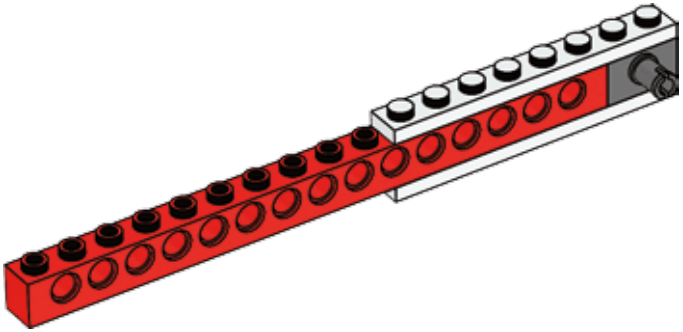

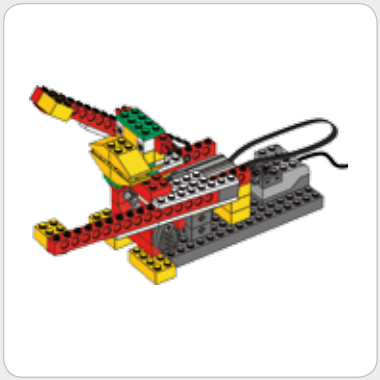

22

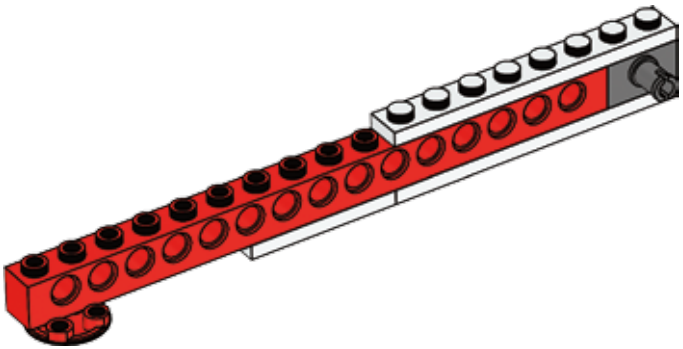

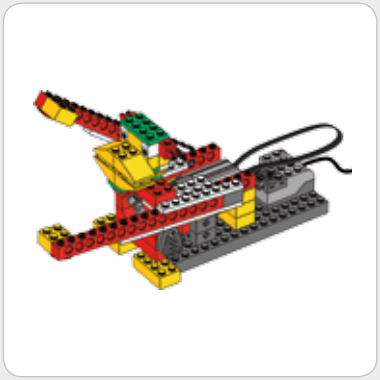

23

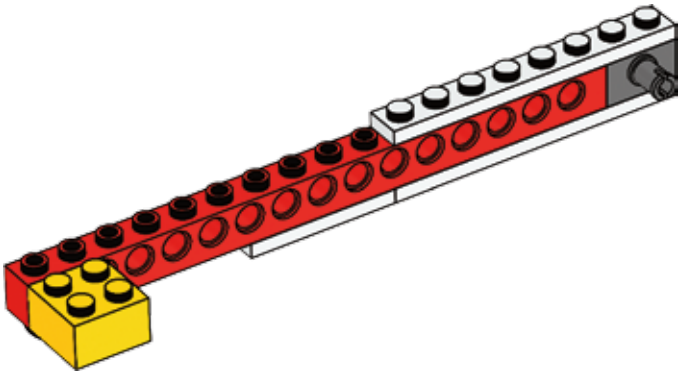

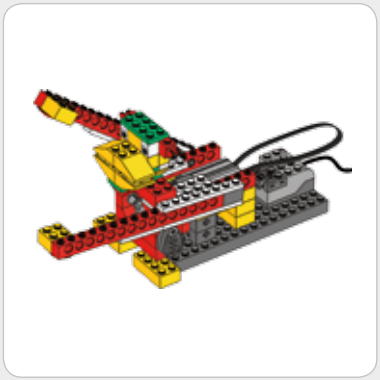

24

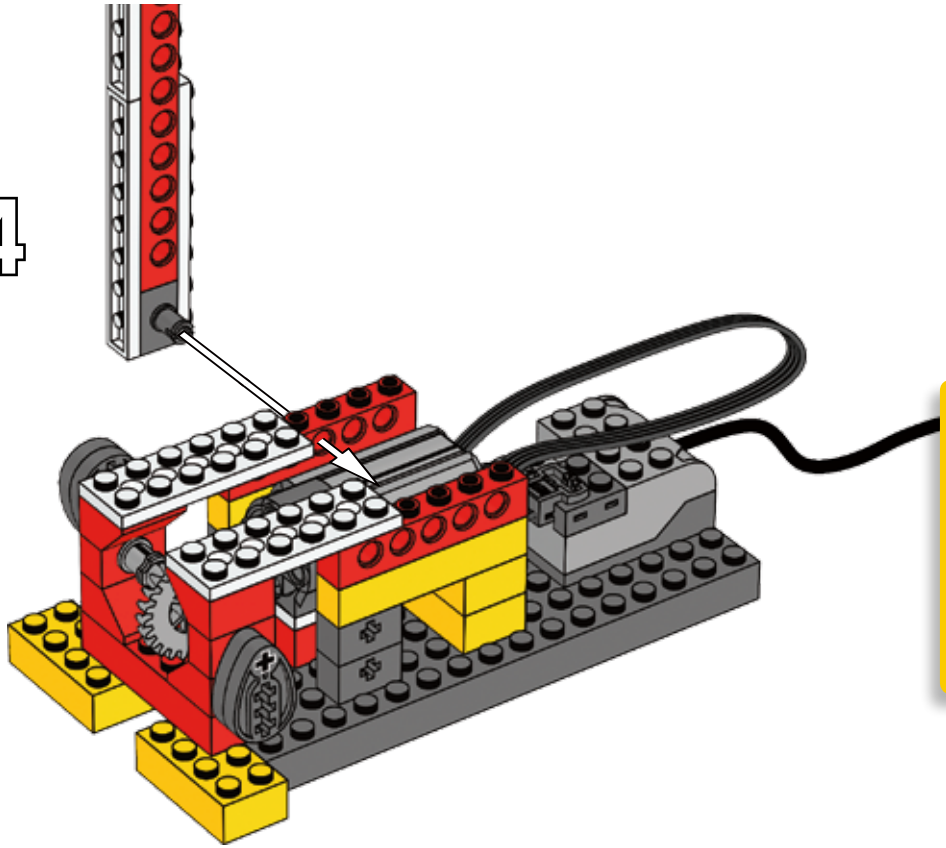

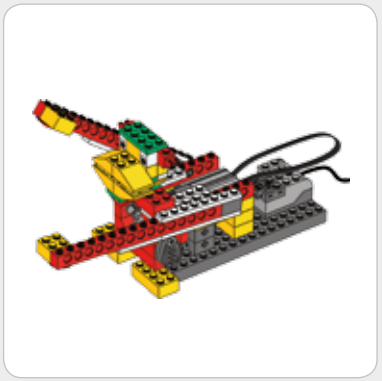

25

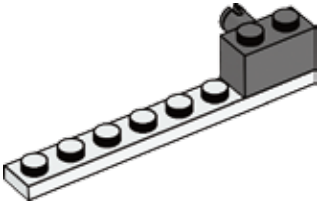

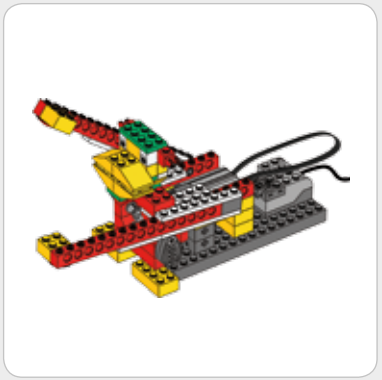

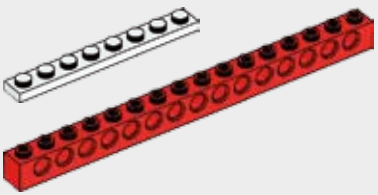

26

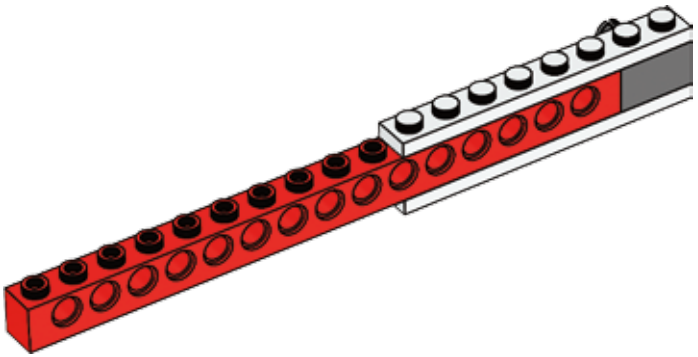

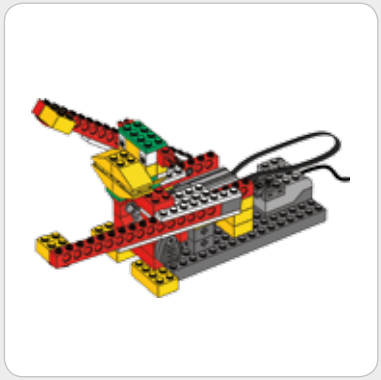

27

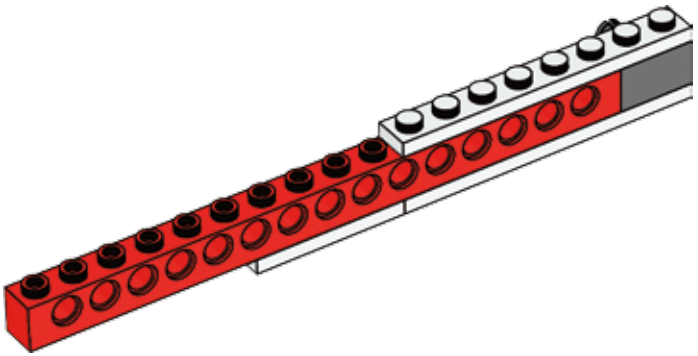

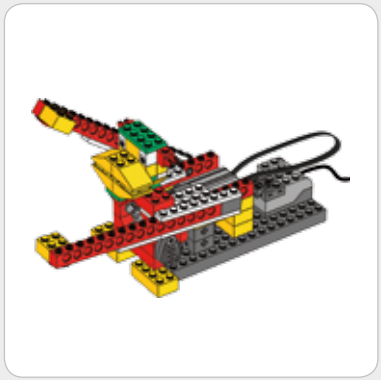

28

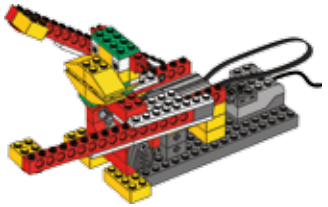

29

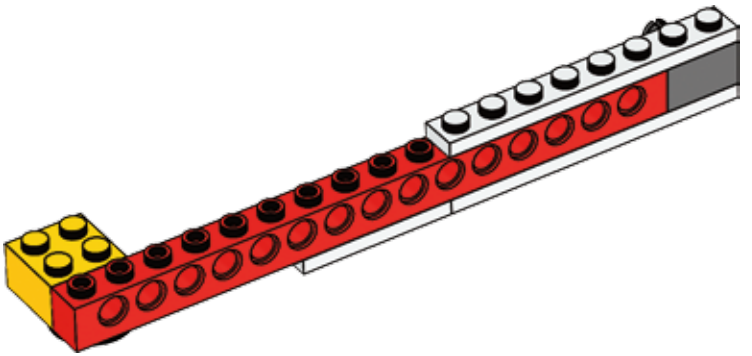

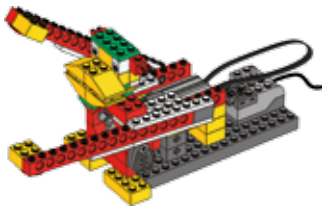

30

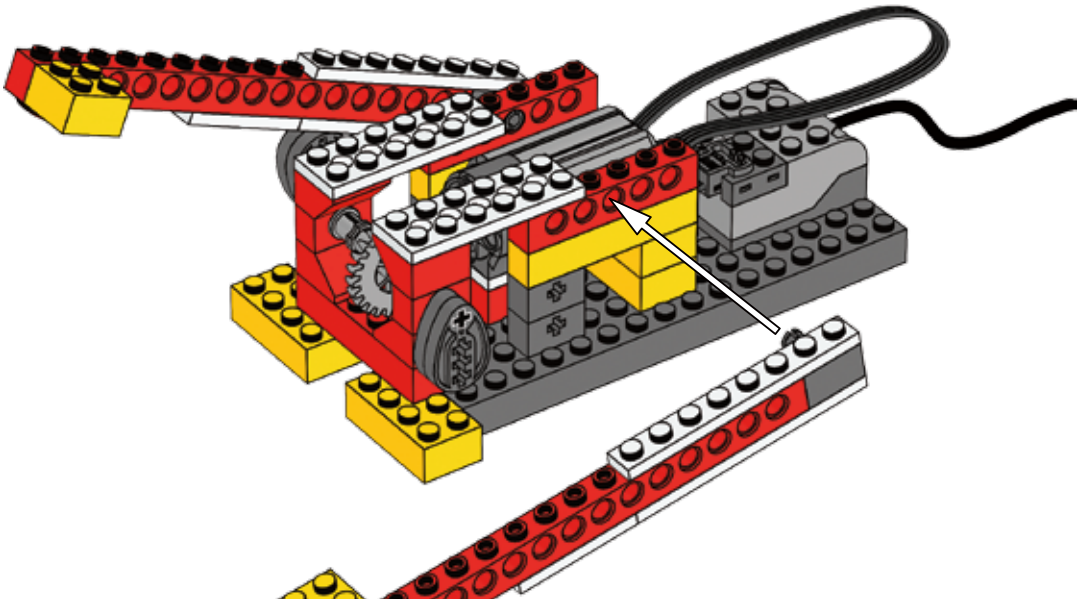

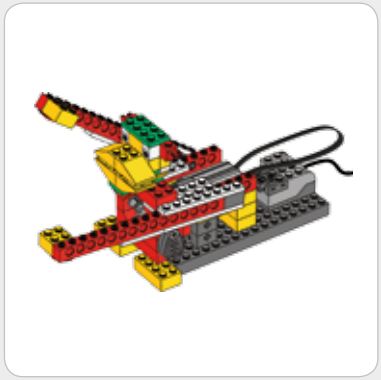

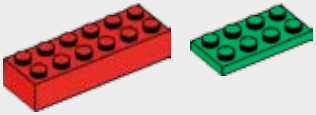

31

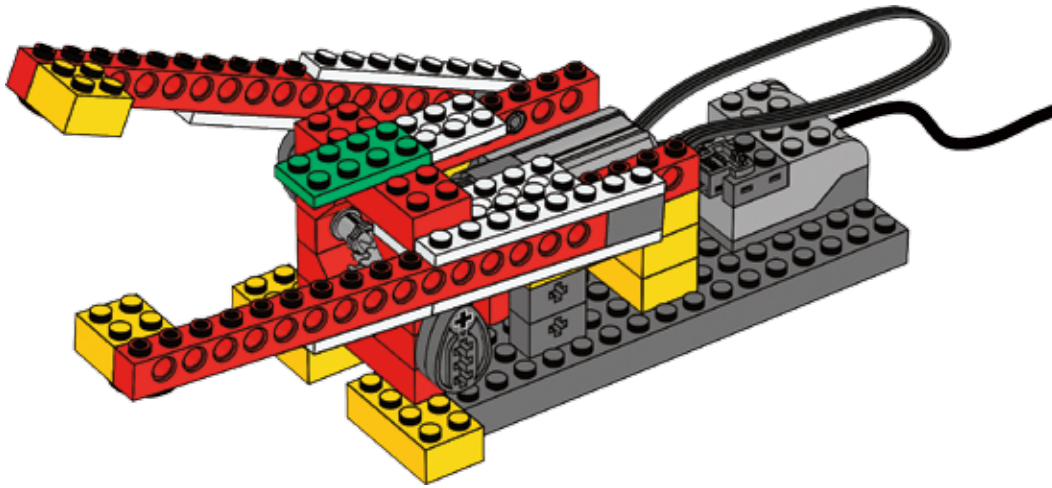

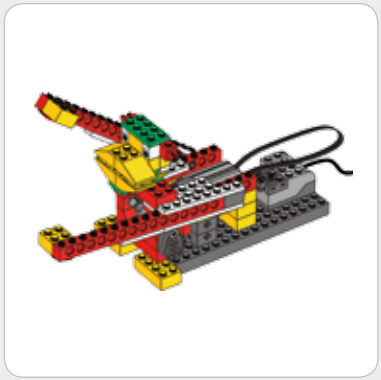

32

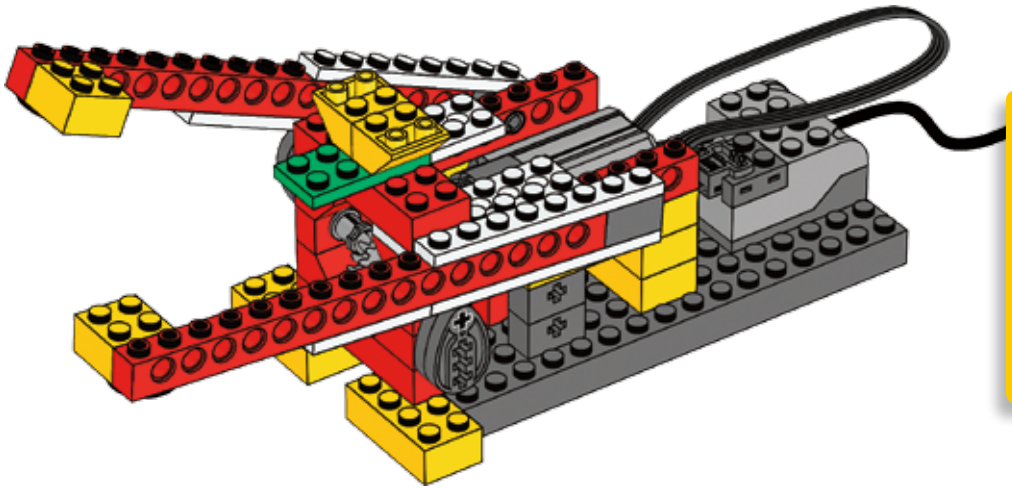

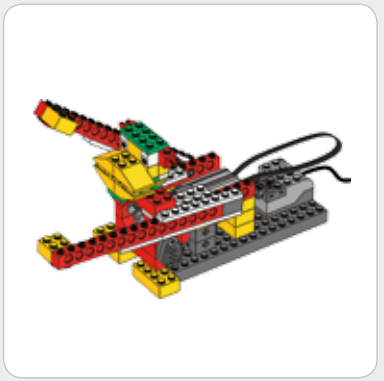

33

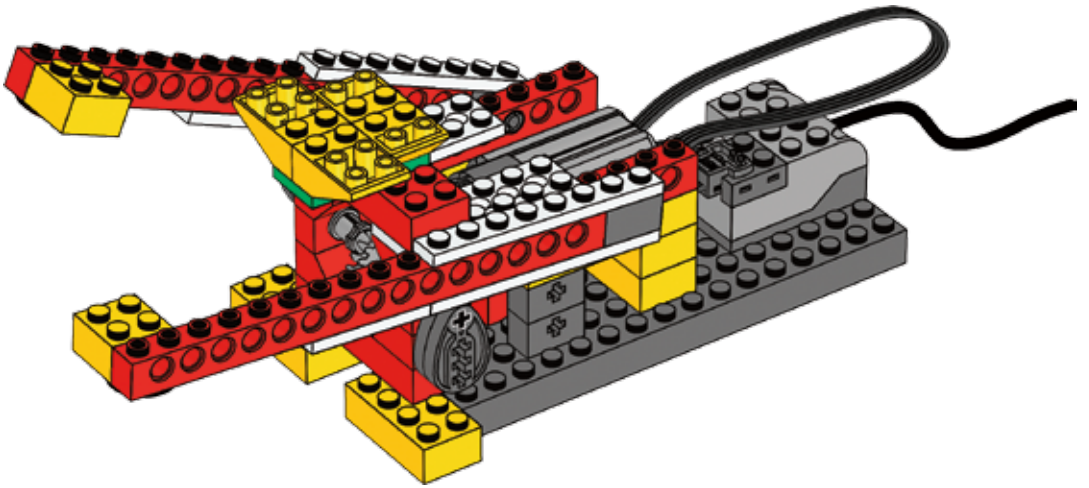

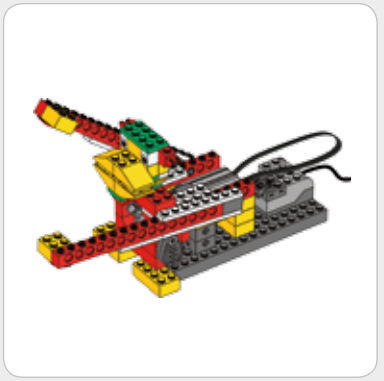

34

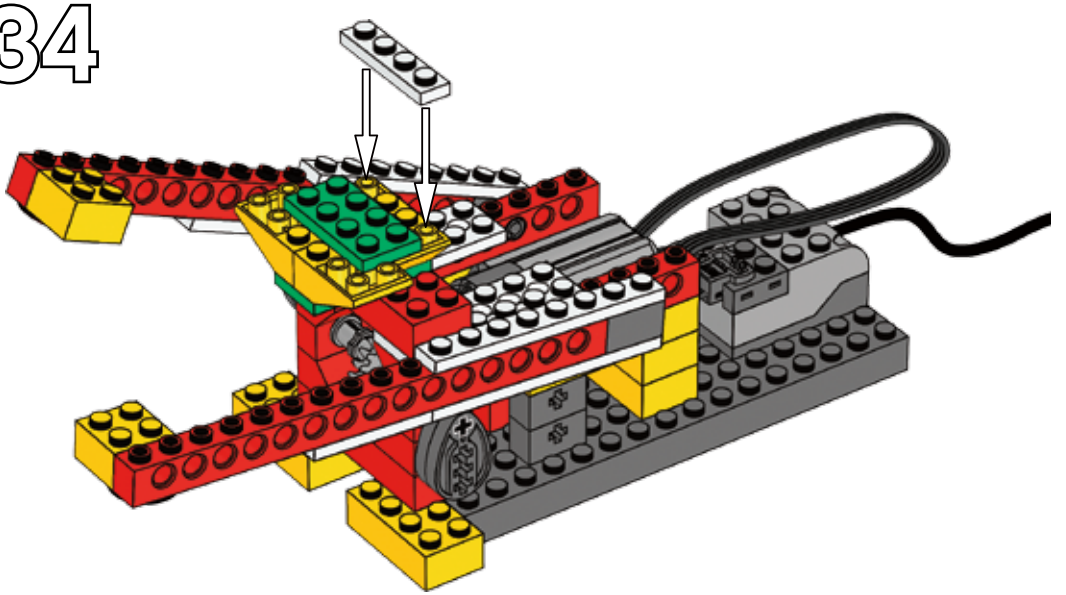

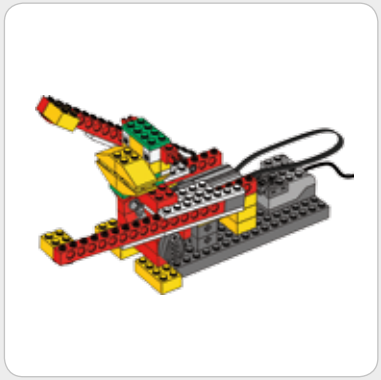

35

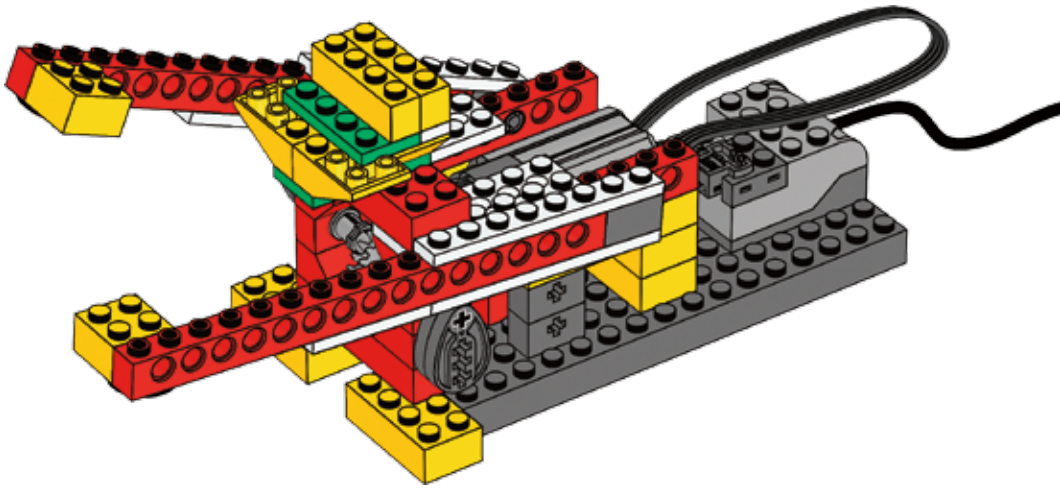

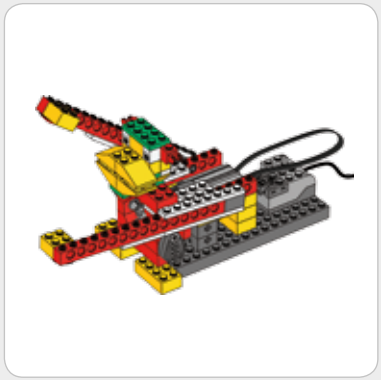

36

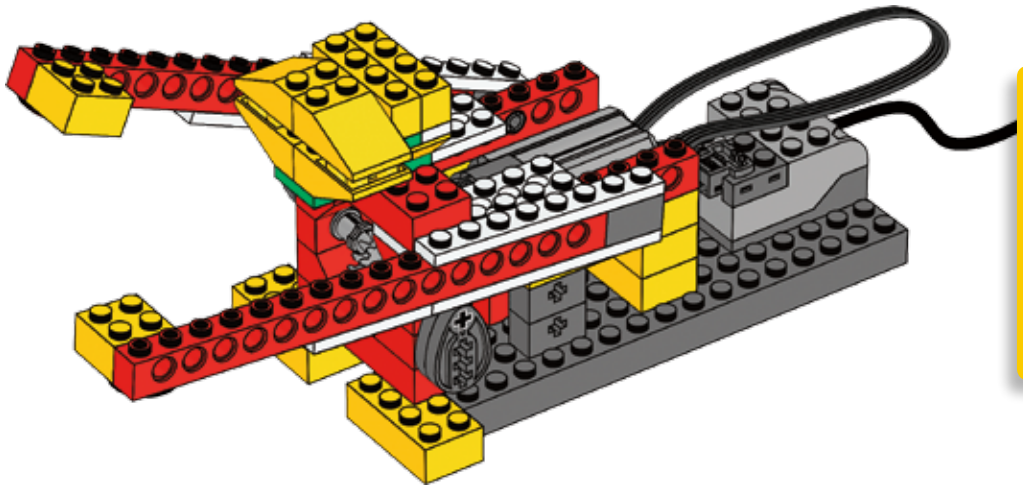

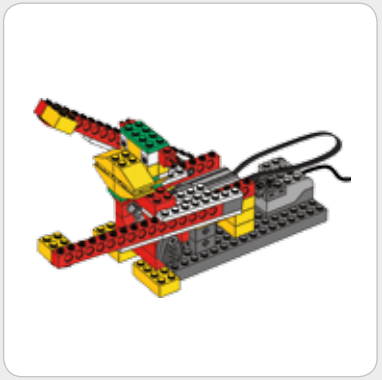

37

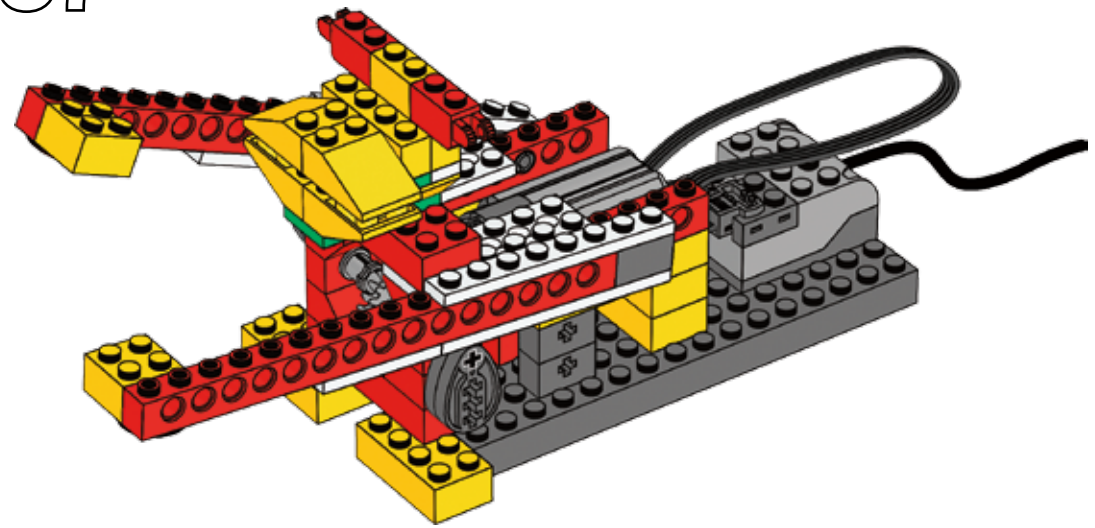

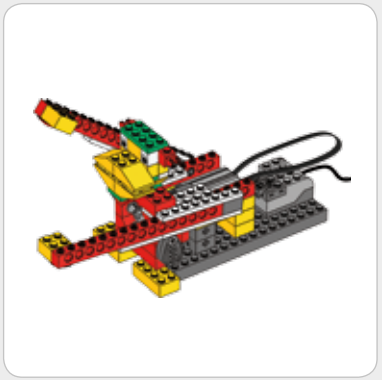

38

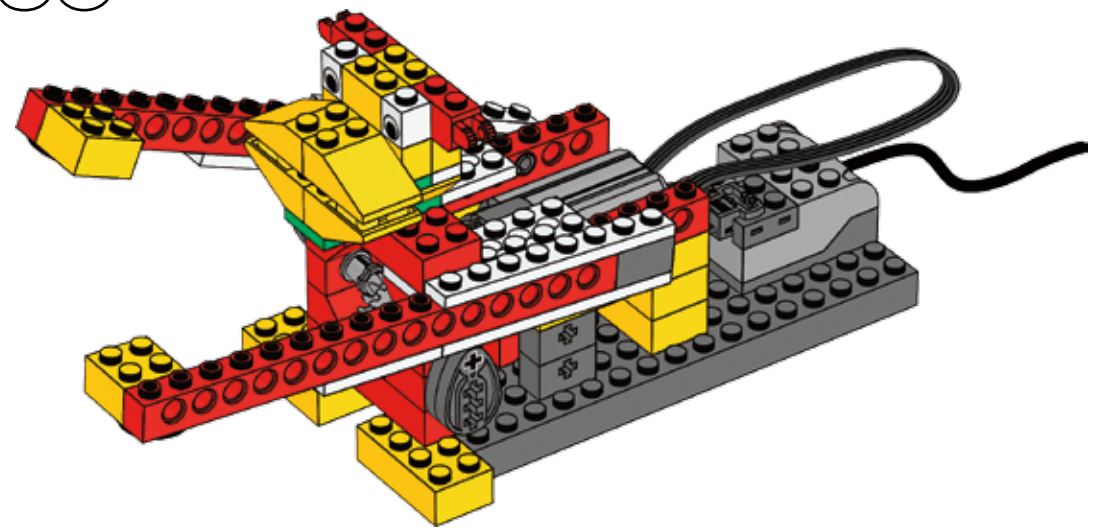

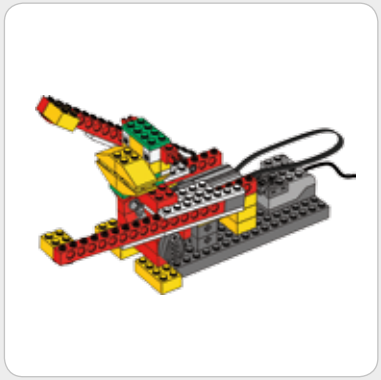

39

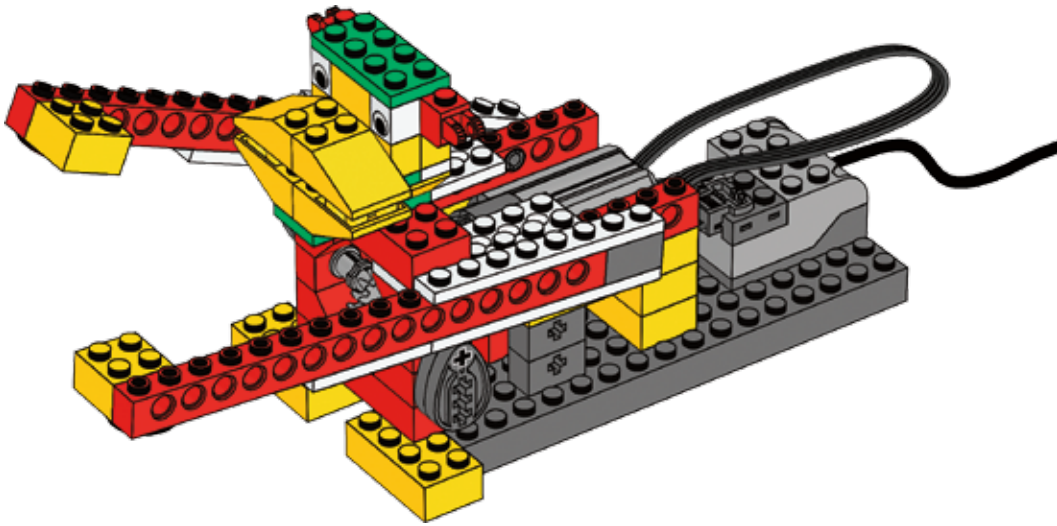

LEGO, the LEGO logo and WEDO are trademarks of the/sont des marques de commerce de/son marcas registradas de LEGO Group. ©2008 The LEGO Group.